502547 APU Menu Tree

Copyright © 2012 MTI

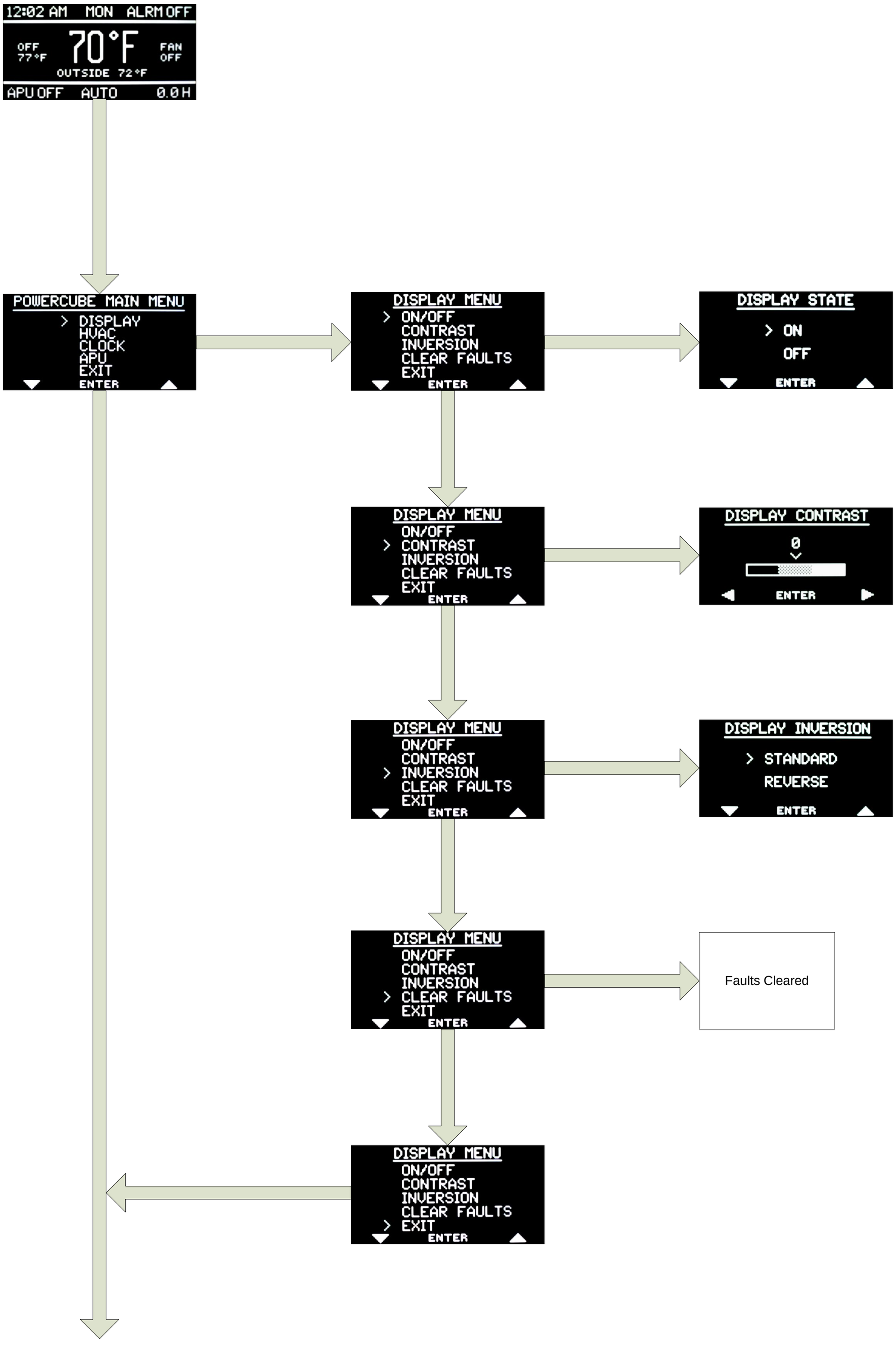

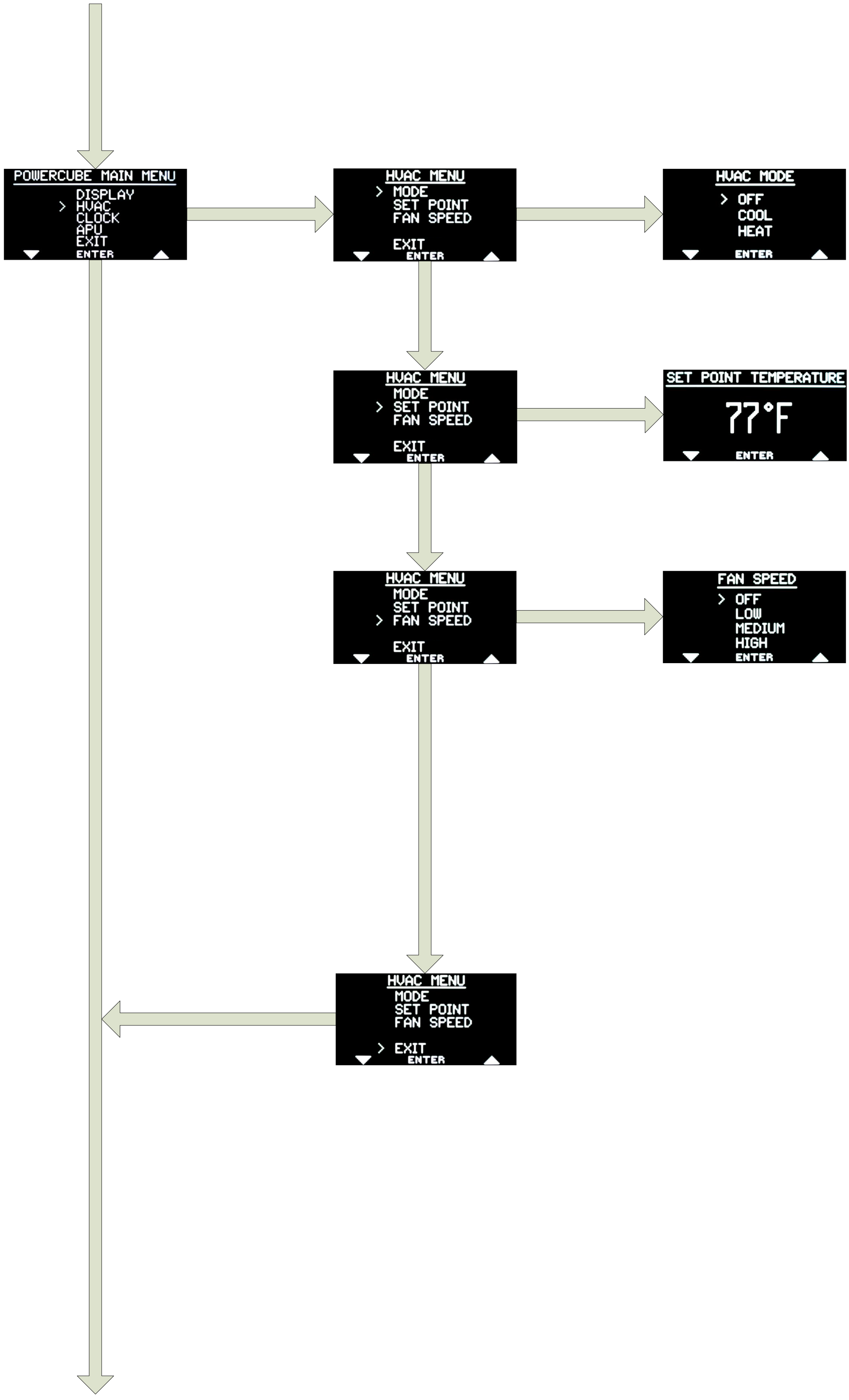
POWERCUBE MAIN MENU
DISPLAY
> HVAC
CLOCK
APU
EXIT
ENTER
HVAC MENU
> MODE
SET POINT
FAN SPEED
EXIT
ENTER
HVAC MODE
> OFF
COOL
HEAT
ENTER
HVAC MENU
MODE
> SET POINT
FAN SPEED
EXIT
ENTER
SET POINT TEMPERATURE
77°F
ENTER
HVAC MENU
MODE
SET POINT
> FAN SPEED
EXIT
ENTER
FAN SPEED
> OFF
LOW
MEDIUM
HIGH
ENTER
HVAC MENU
MODE
SET POINT
FAN SPEED
> EXIT
ENTER

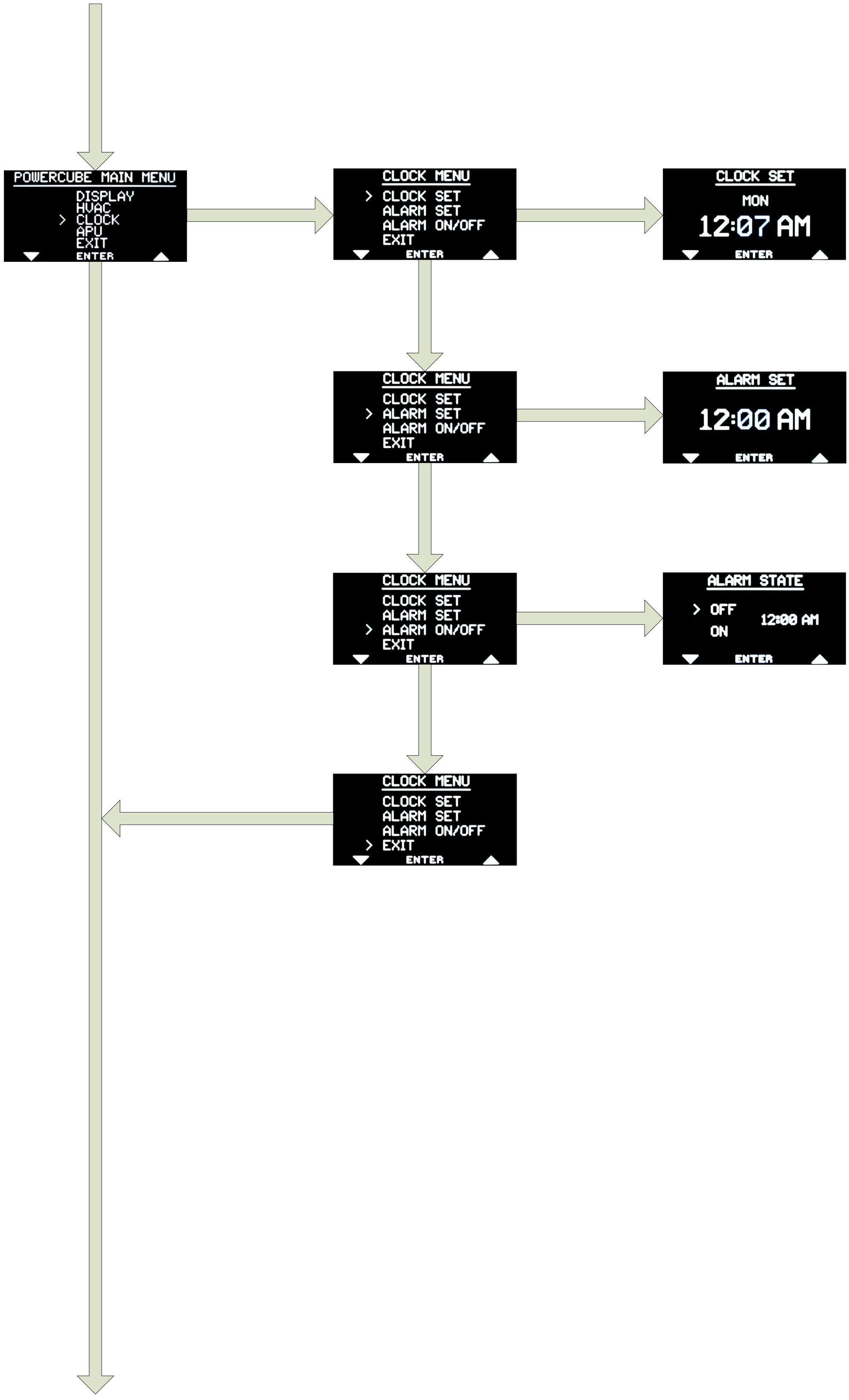
POWERCUBE MAIN MENU
DISPLAY
HVAC
> CLOCK
APU
EXIT
ENTER
CLOCK MENU
> CLOCK SET
ALARM SET
ALARM ON/OFF
EXIT
ENTER
CLOCK SET
MON
12:07 AM
ENTER
CLOCK MENU
CLOCK SET
> ALARM SET
ALARM ON/OFF
EXIT
ENTER
ALARM SET
12:00 AM
ENTER
CLOCK MENU
CLOCK SET
ALARM SET
> ALARM ON/OFF
EXIT
ENTER
ALARM STATE
> OFF
ON
12:00 AM
ENTER
CLOCK MENU
CLOCK SET
ALARM SET
ALARM ON/OFF
> EXIT
ENTER

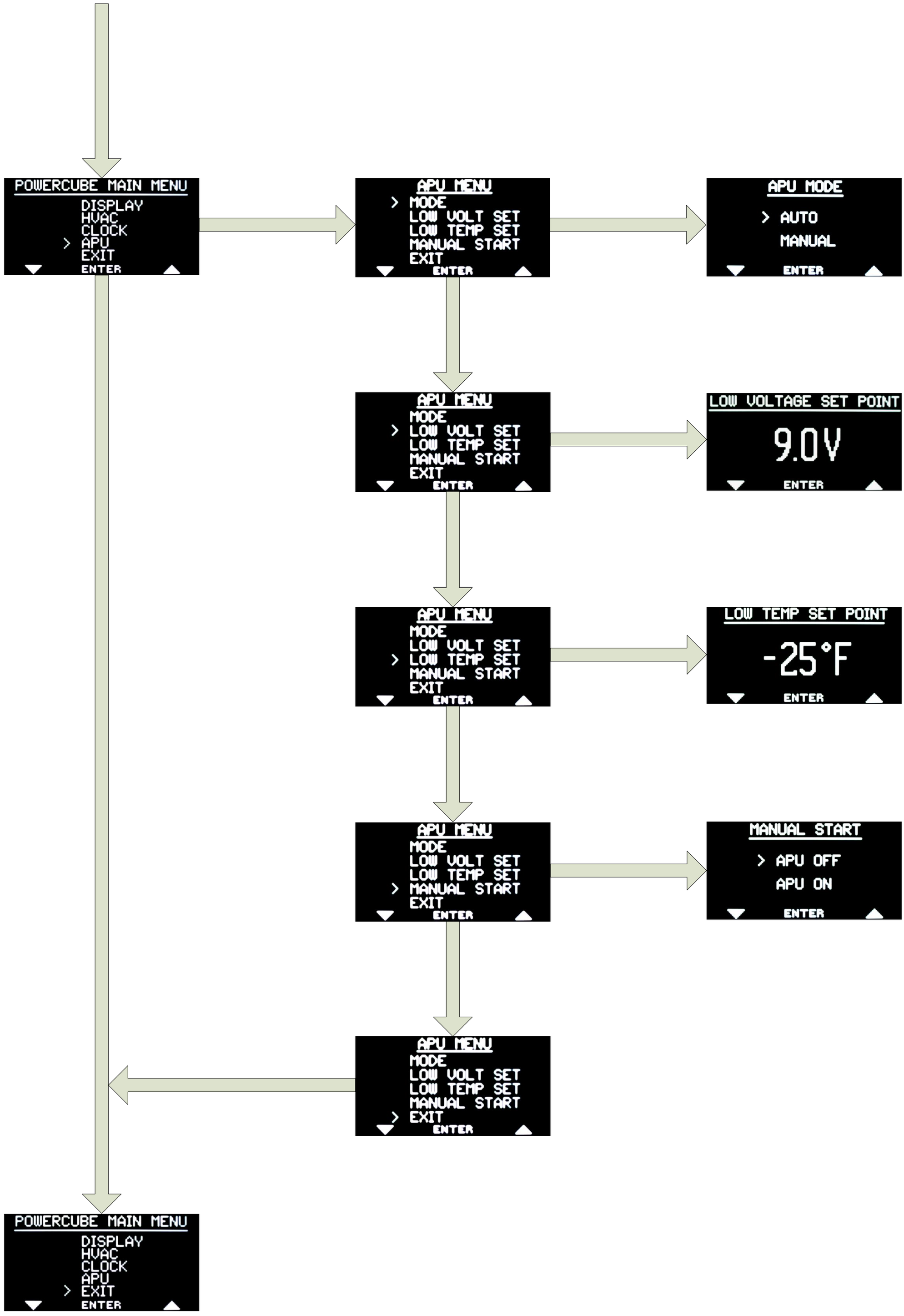
POWERCUBE MAIN MENU
DISPLAY
HVAC
CLOCK
> APU
EXIT
ENTER
APU MENU
> MODE
LOW VOLT SET
LOW TEMP SET
MANUAL START
EXIT
ENTER
APU MODE
> AUTO
MANUAL
ENTER
APU MENU
MODE
> LOW VOLT SET
LOW TEMP SET
MANUAL START
EXIT
ENTER
LOW VOLTAGE SET POINT
9.0V
ENTER
APU MENU
MODE
LOW VOLT SET
> LOW TEMP SET
MANUAL START
EXIT
ENTER
LOW TEMP SET POINT
-25°F
ENTER
APU MENU
MODE
LOW VOLT SET
LOW TEMP SET
> MANUAL START
EXIT
ENTER
MANUAL START
> APU OFF
APU ON
ENTER
APU MENU
MODE
LOW VOLT SET
LOW TEMP SET
MANUAL START
> EXIT
ENTER
POWERCUBE MAIN MENU
DISPLAY
HVAC
CLOCK
APU
> EXIT
ENTER